CS4000HAX

Hall-effect Current Sensor Series

Open loop current sensor based on the principle of Hall-effect. It can be used for measuring AC,DC,pulsed and mixed current.

Electrical characteristics

	Type	CS500HAX	CS800HAX	CS1000HAX	CS1500HAX	CS2500HAX	CS4000HAX	
I_{PN}	Primary nominal input current	500	800	1000	1500	2500	4000	A
I_P	Measuring range of primary current	0~±1500	0~±2400	0~±3000	0~±4500	0~±6000	0~±6000	A
V_{OUT}	Nominal output voltage	4±1%						V
V_C	Supply voltage	±15(±5%)						V
I_C	Current consumption	<30						mA
V_D	Insulation voltage	AC/50Hz/1min	5					kV
ε_L	Linearity	<1						%FS
V_O	Offset voltage	T_A=25℃	<±20					mV
V_{OM}	Residual voltage	I_{PN}→0	<±25					mV
V_{OT}	Thermal drift of V_0	I_P=0 T_A=–25~+85℃	<±1					mV/℃
T_R	Response time	≤5						μs
f	Frequency bandwidth(-3dB)	DC~20						kHz
T_A	Ambient operating temperature	–25~+85						℃
T_S	Ambient storage temperature	–25~+105						℃
R_L	Load resistance	≥10						KΩ
m	Mass(approx)	520						g
	Standard	Q/320115QHKJ01-2013						

Dimensions of drawing (mm)

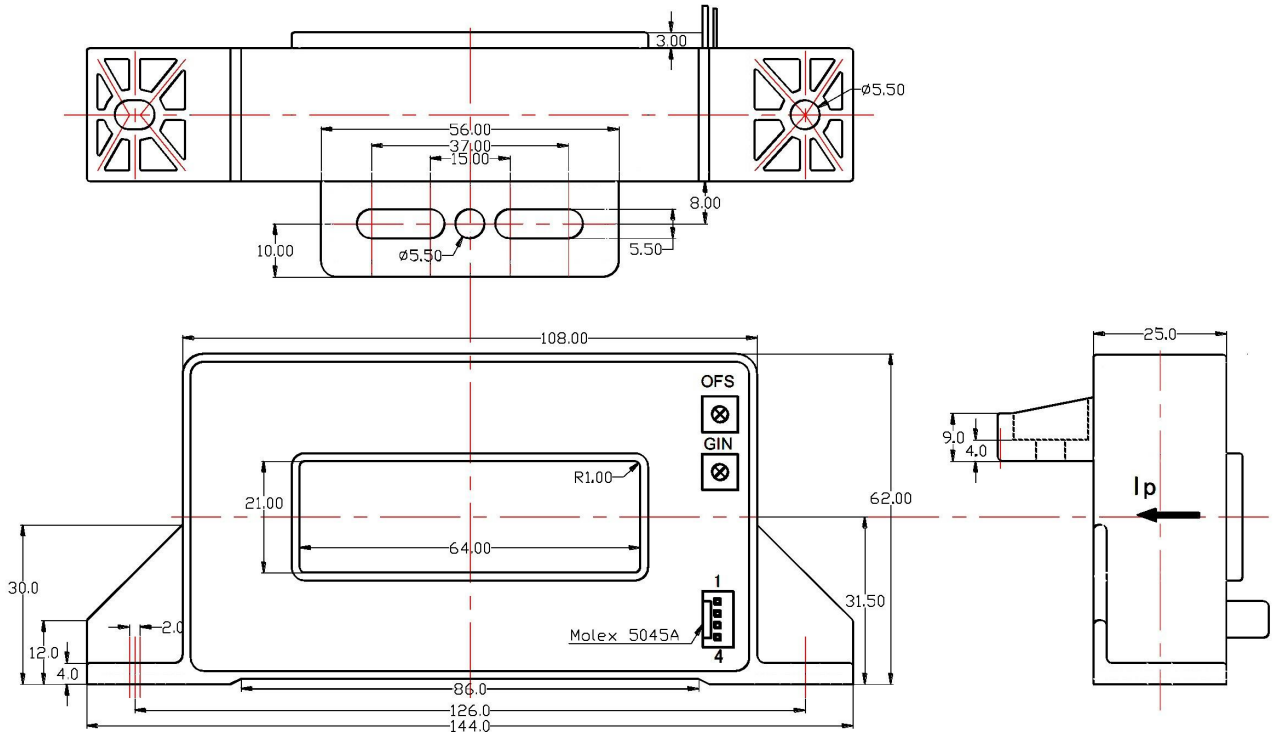

Elucidation: 1:+15V 2:–15V 3: V_{OUT} 4:0V(GND) OFS:Zero adjustment GIN:Gain adjustment

Remarks

·Incorrect connection may lead to the damage of the sensor.

·V_{OUT} is positive when the I_P flows in the direction of the arrow.